FLOMATIC DCV
FLOMATIC DCVE

SIZE
3/4”, 1”, 1 1/2”, 2”, 2 1/2”, 3”, 4”, 6”, 8”, 10”

DESCRIPTION
This is a double check assembly. Production began in 1993. The division that produced backflow preventers was purchased by Watts Regulator in 2011. Production of these assemblies was discontinued in 2013. The 3/4”-2” body is made of bronze and the 2 1/2”-10” size is a ductile iron body that is fused epoxy coated. There is a single cover on the top. The checks are modular in design. Check modules are held in the body with spring clips. Check seats are replaceable. In 2002 the model DCVE was introduced in sizes 3/4”-2” which is similar in construction as the DCV except the body is made of an unleaded bronze alloy. Most repair parts are the same.

BASIC REPAIR KIT
Repair kit contains discs and O’rings

SIZE	KIT NO
3/4”-1” DCV & DCVE	B91RK00 ◆
1 1/2”-2” DCV & DCVE	B91RK03
2 1/2”-3”	B91RK05
4”	B91RK07
6”	B91RK09
8”	B91RK10
10”	B91RK11 ◆

IMPORTANT FEATURES
~Bronze body 1/2”-2”

~Fused epoxy ductile iron body 2 1/2”-8”

~Modular check design

~Single access cover

~Factory repair information enclosed

FLOMATIC® VALVES

MODEL DCV DOUBLE CHECK VALVE

3/4" THRU 2"

DCVE (3/4"-2")

Model DCV

Pressure Max: 175 PSI
Temperature Max:180°F

Description	Materials
Body	Bronze
Springs	Stainless Steel
Poppets	Bronze
Check Valve Seats	Noryl®
Spring Clips	Stainless Steel
Seat Discs	Silicone Rubber
Fasteners	Stainless Steel

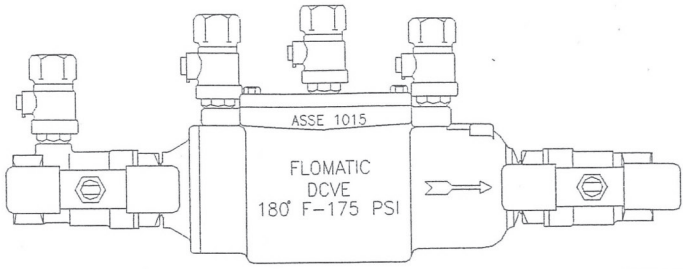

FLOW CURVES with BALL VALVES

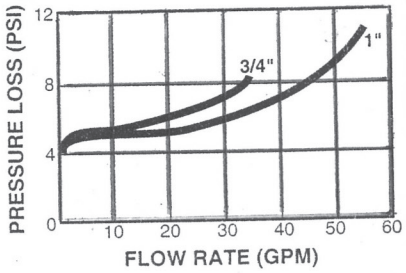

FLOW CURVES with BALL VALVES

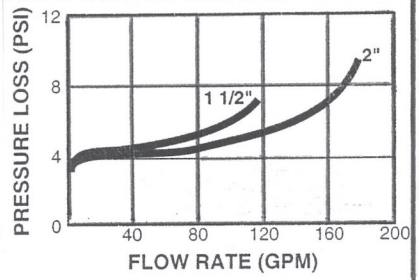

Model DCVE

Maximum working water pressure — 175 PSI (1200 kPa)
Maximum working water temperature - 180°F
Hydrostatic Test Pressure — 350 PSI (2400 kPa)

Materials

Valve Body — Unleaded Bronze (Federalloy I-836)
Access cover — Unleaded Bronze (Federalloy I-836)
Polymers — Noryl™, NSF Listed
Elastomers — Silicone
Springs — Stainless Steel

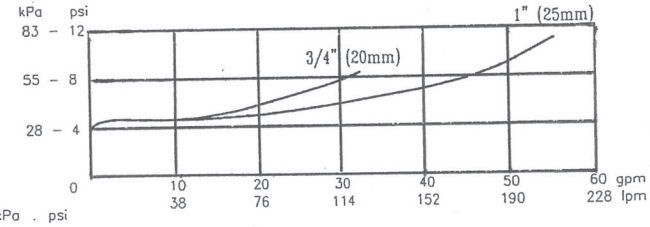

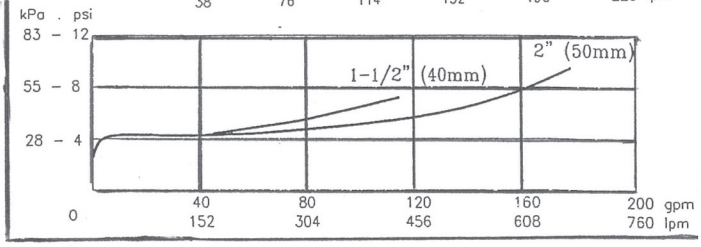

		3/4"	1"	1 1/2"	2"
DIMENSIONS	A	12	13	19	20
	B	7-5/8	7-5/8	12 1/2	12 1/2
	C	5	5	6 1/2	6 1/2
	D	3 1/2	3 1/2	4 3/8	4 3/8
	WIDTH	3 1/4	3 1/4	4 3/4	4 3/4
NET WEIGHT		7 1/4	8 1/4	23 1/2	28
SHIPPING WEIGHT		9 1/4	10 1/4	28 1/2	33

CK Assy

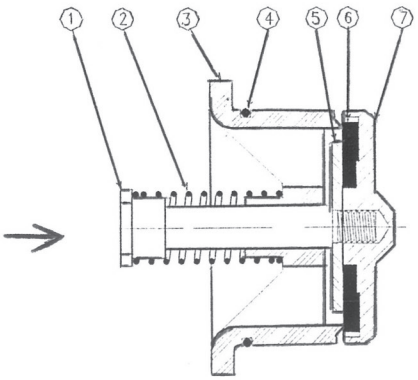

ITEM	DESCRIPTION
1	C.V. STEM
2	C.V. SPRING
3	2nd C.V. Seat Ring
4	C.V. O-Ring
5	C.V. Disc Retainer
6	C.V DISC
7	C.V. DISCHOLDER

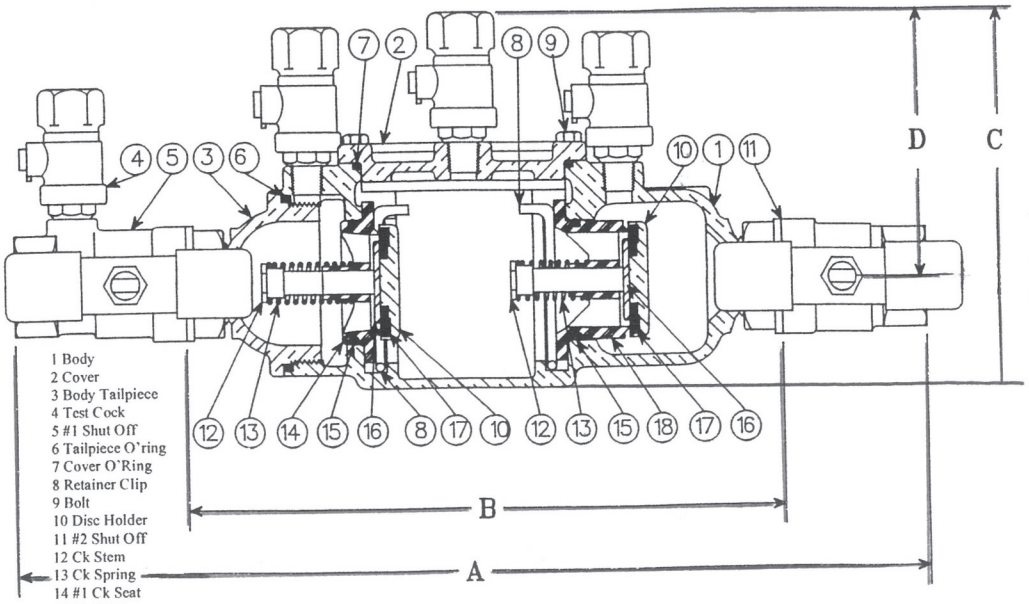

1 Body
2 Cover
3 Body Tailpiece
4 Test Cock
5 #1 Shut Off
6 Tailpiece O'ring
7 Cover O'Ring
8 Retainer Clip
9 Bolt
10 Disc Holder
11 #2 Shut Off
12 Ck Stem
13 Ck Spring
14 #1 Ck Seat
15 Ck O'Ring
16 Ck Disc Ret
17 Ck Disc
18 #2 Ck Seat

FLOMATIC® VALVES

Double Check Assembly
Model DCV 2 ½ - 10"

Max. working pressure: 175 PSI (1200 kPa)
Max. working temperature: 140°F (82°C)
Hydrostatic Test Pressure: 350 PSI (2400 kPa)

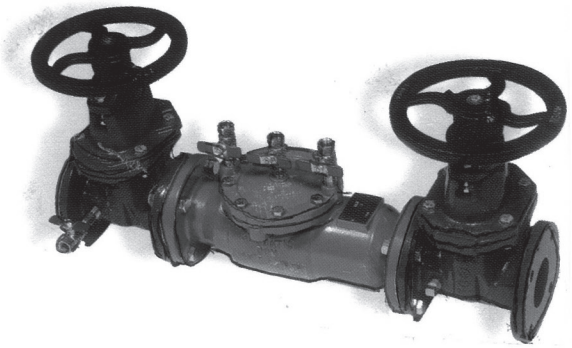

MATERIALS:

Valve Body: Ductile Iron
Access Cover: Ductile Iron
Polymers: Noryl™, NSF Listed
Elastomers: Silicone
Buna-n (FDA approved)
Springs: Stainless Steel
Coating: FDA approved fusion epoxy

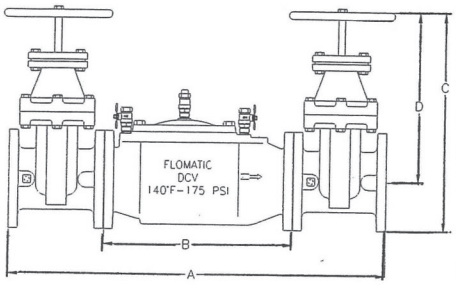

Size		Part #	A		B		C		D		Width		Wgt with GV		Wgt less GV	
Inch	mm		Inch	mm	Inch	mm	Inch	mm	Inch	mm	Inch	Mm	lbs	kg	lbs	kg
2-1/2	65	B9105	31-1/4	794	16-1/4	413	14-7/8	378	11-3/8	289	7-3/4	197	154	70	50	22.75
3	80	B9106	32-1/4	819	16-1/4	413	16-1/8	410	12-3/8	314	10	254	176	80	50	22.75
4	100	B9107	39	991	21	533	19-1/4	489	14-3/4	375	10	254	290	131.75	100	45.5
6	150	B9109	42	1067	21	533	24-1/2	622	19	483	12-1/8	308	447	202.75	147	66.75
8	200	B91010	50-1/2	1283	27-1/2	699	29-1/4	743	22-1/2	572	14-3/4	375	695	315.25	285	129.5
10	250	B91011	58-3/4	1492	32-1/2	826	34-1/2	876	26-1/2	673	18	457	1170	530	450	204

FLOW CHARACTERISTICS

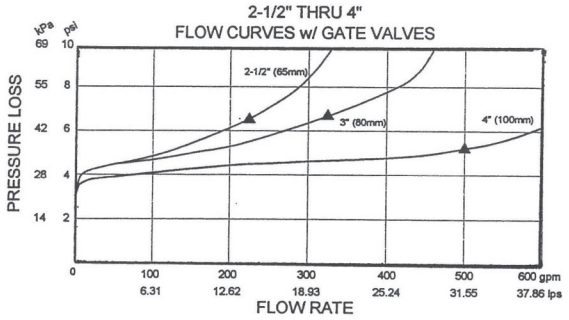

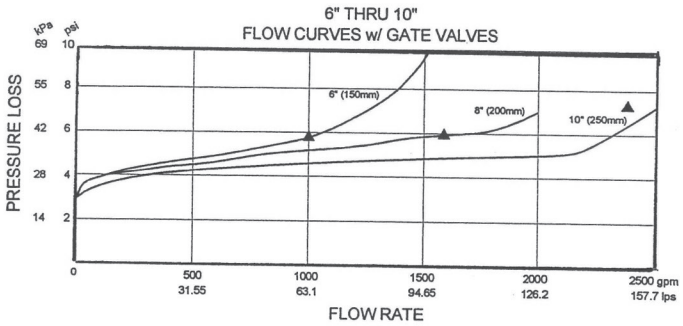

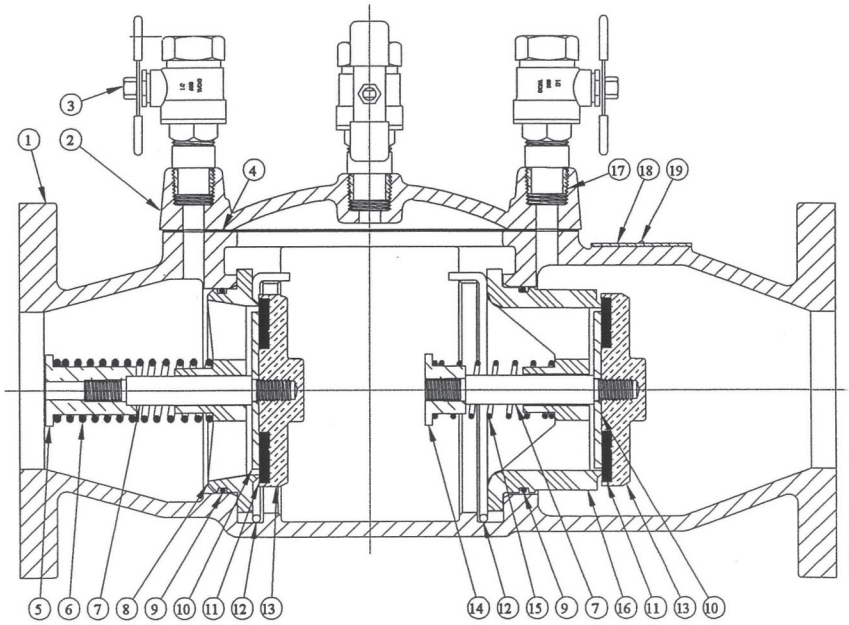

ITEM	QTY.	DESCRIPTION
1	1	VALVE BODY
2	1	VALVE COVER
3	4	1/2" BALL VALVE
4	1	DCV COVER GASKET
5	1	1st CHECK VALVE STEM RETAINER
6	1	1st CHECK VALVE SPRING
7	2	CHECK VALVE STEM
8	1	1st CHECK VALVE SEAT RING
9	2	CHECK VALVE O'RING
10	2	CHECK VALVE DISC RETAINER
11	2	CHECK VALVE DISC
12	2	CHECK VALVE SPRING CLIP
13	2	CHECK VALVE DISC HOLDER
14	1	2nd CHECK VALVE STEM RETAINER
15	1	2nd CHECK VALVE SPRING
16	1	2nd CHECK VALVE SEAT RING
17	3	1/2" x 1 1/2" NIPPLE
18	1	IDENTIFICATION TAG
19	2	GRIP NAIL
20	2	NRS TYPE G.V.
21	8	5/8"-11 x 2 1/4" HXHD BOLT
22	8	5/8"-11 HXHD NUT
23	8	1/2"-13 x 1 1/4" HXHD BOLT
24	2	3" RING GASKET
25	1	1/2" x 2 1/2" NIPPLE
26	1	1/2" NPT PLUG

NOTE: Items 20 thru 26 not shown on drawing.

FLOMATIC RPZ & RPZII
FLOMATIC RPZE & RPZEII

SIZE
1/2”, 3/4”, 1”, 1 1/4”, 1 1/2”, 2”, 2 1/2”, 3”, 4”, 6”, 8”, 10”

DESCRIPTION
This is a reduced pressure assembly. Production began in 1993 The division that produced backflow preventers was purchased by Watts Regulator in 2011. Production of these assemblies was discontinued in 2013. The 1/2”-2” body is made of bronze and the 2 1/2”-10” size is a ductile iron body that is fused epoxy coated. There is a single cover on the top. The checks are modular in design. Check modules are held in the body with spring clips. There is tension from the relief valve spring when the cover is removed. All seats are replaceable. In 1996 the model RPZII was introduced in 1/2” and 3/4” sizes. In 2000 the 1 1/4” RPZ and 1 1/2” RPZII were introduced. The RPZII is smaller in size than the RPZ model but is similar in construction. In 2002 the model RPZE and RPZEII was introduced in sizes 3/4”-2”. This model is similar to the RPZ and RPZII except the body is made of an unleaded bronze alloy. Most repair parts are the same.

BASIC REPAIR KIT
Repair kit contains discs, diaphragm, and O’rings

SIZE	KIT NO	AIR GAP DRAIN
1/2”-3/4” RPZII & RPZEII	B93RK99 ◆	N/A
3/4”-1” RPZ & RPZE	B92RK00 ◆	N/A
1 1/4” RPZ & RPZE	B92RK02	N/A
1 1/2”-2” RPZ &RPZE	B92RK03 ◆	N/A
1 1/2” RPZII & RPZEII	B93RK03	N/A
2 1/2”-3” RPZ	B92RK05 ◆	84735
4”	B92RK07 ◆	84737
6”	B92RK09 ◆	84737
8”	B92RK10	84737
10”	B92RK11 ◆	84737

IMPORTANT FEATURES
~Bronze body 1/2”-2”
~Fused epoxy ductile iron body 2 1/2”-3”
~Modular check design
~Single access cover
~Factory repair information enclosed

BAVCO
BACKFLOW APPARATUS & VALVE CO.

FLOMATIC® VALVES

Model RPZ / RPZII / RPZE / RPZEII ¾ - 2”

RPZE / RPZEII

Maximum working water pressure ——175 PSI (1200 kPa)
Maximum working water temperature –180°F
Hydrostatic Test Pressure ————— 350 PSI (2400 kPa)

Materials
Valve Body——· Unleaded Bronze (Federalloy I-836)
Access cover — Unleaded Bronze (Federalloy I-836)
Polymers ——— Noryl™, NSF Listed
Elastomers —— Silicone
Springs ——— Stainless Steel

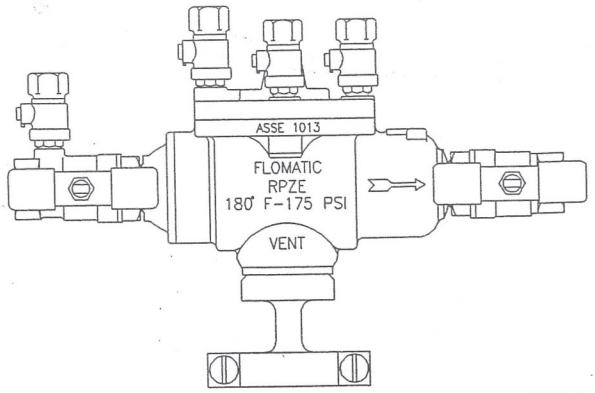

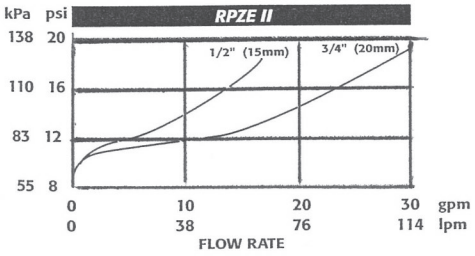

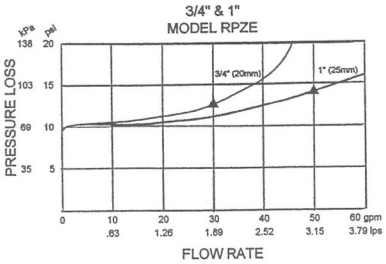

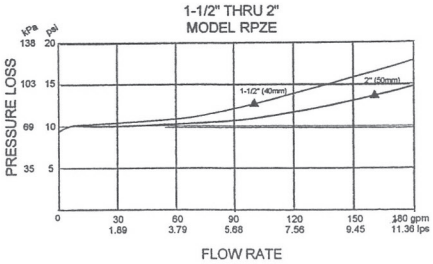

RPZ / RPZII

Pressure Max: 175 PSI
Temperature Max:180°F

Description	Materials
Body	Bronze
Springs	Stainless Steel
Poppets	Bronze
Check Valve Seats	Noryl®
Spring Clips	Stainless Steel
Relief Valve Assembly	Noryl®
Relief Valve Seat	Stainless Steel
Seat Discs	Silicone Rubber
Diaphragm	Buna/Nylon
Fasteners	Stainless Steel

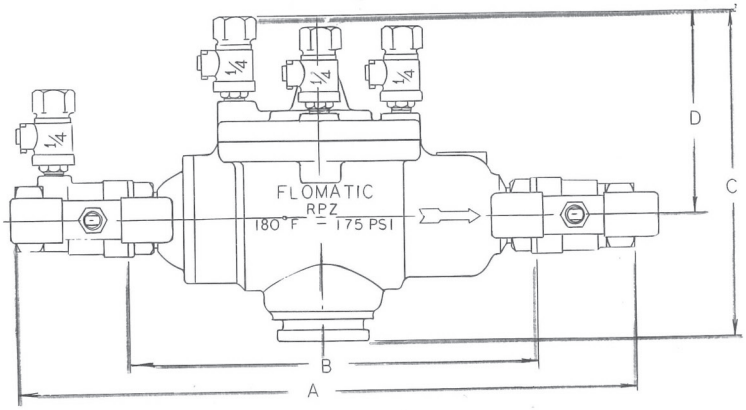

RPZ / RPZE Dimensions	VALVE SIZE ¾”	1”	1 ¼’	1 ½’	2”
A	12	13	14 3/8	19	20
B	8	8	9	12 ½	12 ½
C	6 ½	6 ½	7 ¼	8 ¾	8 ¾
D	4	4	4 1/8	5	5
Width	4	4	4 9/16	5 ¾	5 ¾
Net Wt	8 ½	9 ½	13	27 ½	32

RPZ

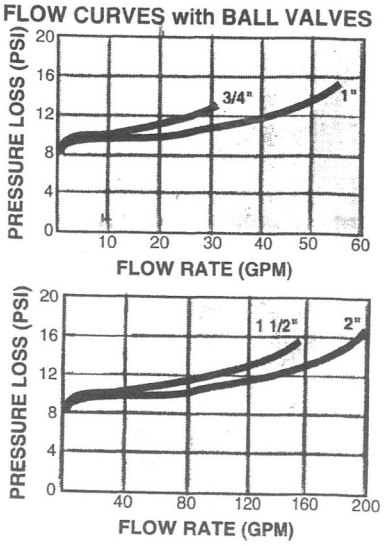

RPZII

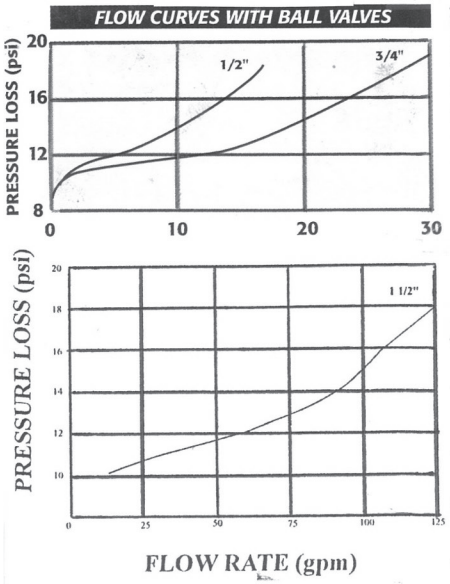

RPZII / RPZEII

	1/2"	3/4"	1 ½”
A	9 1/4	9 3/4	17
B	5 1/2	5 1/2	10 ½
C	5 21/32	5 21/32	4 ½
D	3 5/8	3 5/8	7 63/64
Width	3 5/32	3 5/32	5 1/16
Weight With Ball Valves	4 3/8 lbs.	4 7/8 lbs.	18 ½
Weight Without Ball Valves	3 1/4 lbs.	3 1/4 lbs.	12

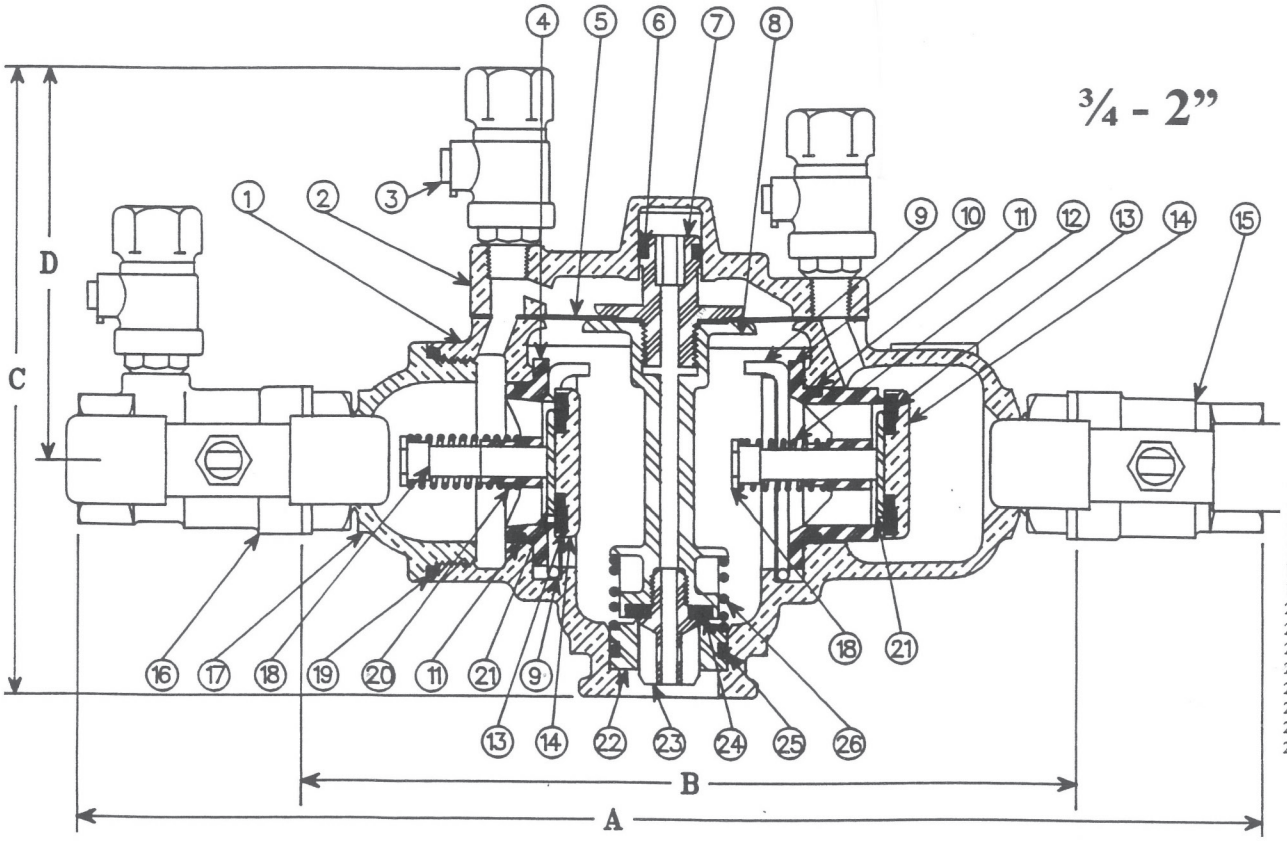

1 Body
2 Cover
3 Test Cock
4 #1 Ck Seat
5 RV Diaphragm
6 RV Piston O'Ring
7 RV Piston
8 RV Stem
9 Retainer Clip
10 #2 Ck Seat
11 Ck O'ring
12 #2 Ck Spring
13 CK Disc
14 Ck Disc Holder
15 #2 Shut Off
16 #1 Shut Off
17 Body Tailpiece
18 Ck Stem
19 Tailpiece O'Ring
20 #1 Ck Spring
21 Ck Disc Retainer
22 RV Seat
23 RV Disc Retainer
24 RV Disc
25 RV Seat O'Ring
26 RV Spring
27 Bolt

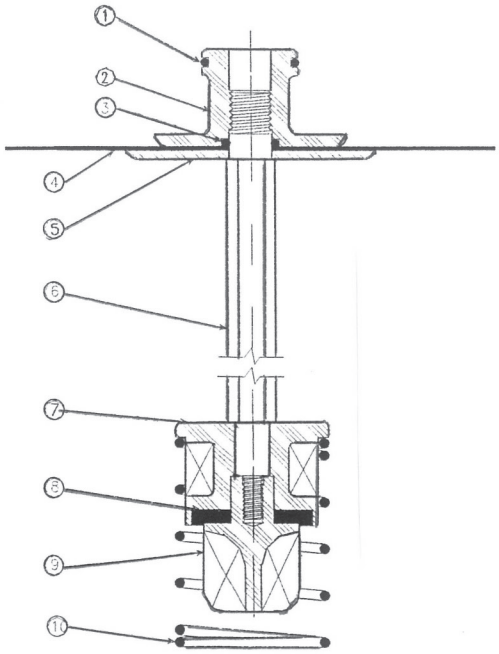

ITEM	DESCRIPTION
1	PISTON O'RING
2	R.V. PISTON
3	R.V. STEM O-RING
4	R.V. DIAPHRAGM
5	R.V. DIAPHRAGM PLATE
6	R.V. STEM
7	R.V. DISCHOLDER
8	R.V. DISC
9	R.V. DISC RETAINER
10	R.V. SPRING

RELIEF VALVE ASS'Y

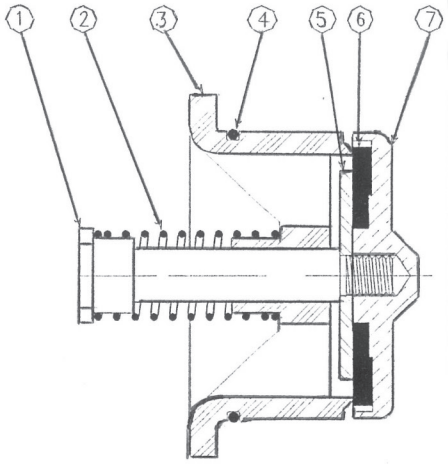

ITEM	DESCRIPTION
1	C.V. STEM
2	C.V. SPRING
3	2nd C.V. Seat Ring
4	C.V. O-Ring
5	C.V. Disc Retainer
6	C.V DISC
7	C.V. DISCHOLDER

CK Assy

FLOMATIC VALVES

Model RPZ

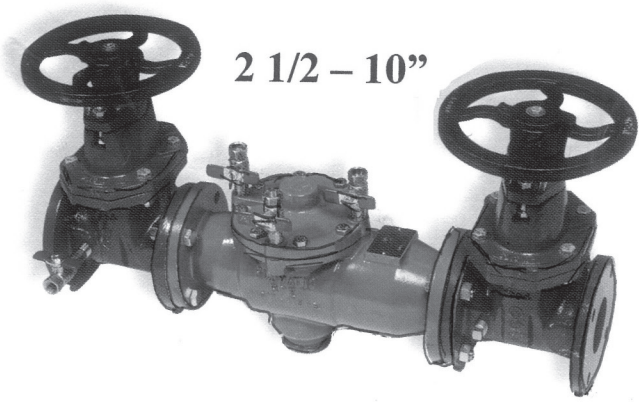

Max. working pressure: 175 PSI (1200 kPa)
Max. working temperature: 140°F (60°C)
Hydrostatic Test Pressure: 350 PSI (2400 kPa)

MATERIALS:

Valve Body: Ductile Iron
Access Cover: Ductile Iron
Polymers: Noryl™, NSF Listed
Elastomers: Silicone
Buna-n (FDA approved)
Springs: Stainless Steel
Coatings: FDA approved fusion epoxy

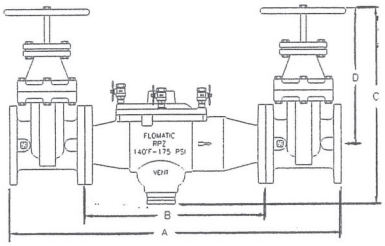

Size		Part #	A		B		C		D		Width		Wgt with GV		Wgt less GV	
Inch	mm		Inch	mm	Inch	mm	Inch	mm	Inch	mm	Inch	mm	lbs	kg	lbs	kg
2-1/2	65	B9205	31-1/4	794	16-1/4	413	16-7/16	418	11-3/8	289	8-1/32	204	164	74.5	60	27
3	80	B9206	32-1/4	819	16-1/4	413	17-7/16	443	12-3/8	314	10	254	186	84.5	60	27
4	100	B9207	39	991	21	533	22-13/32	569	14-3/4	375	10	254	314	142.5	120	54.5
6	150	B9209	44-5/8	1133	23-1/2	597	28-3/8	721	19	483	12-1/2	318	463	210	163	74
8	200	B92010	52-1/2	1334	29-1/2	749	32-7/16	824	22-1/2	572	15-3/16	386	710	322	300	136
10	250	B92011	60	1524	33-7/8	860	36-15/16	938	26-1/2	673	18	457	125	567	530	240

FLOW CHARACTERISTICS

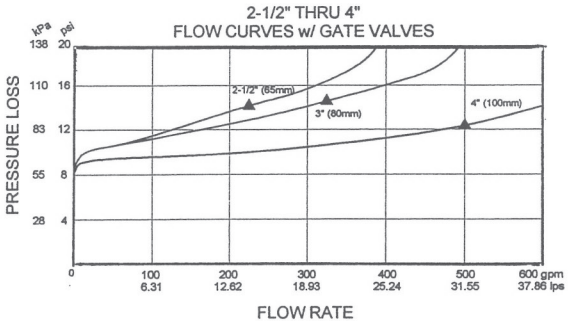

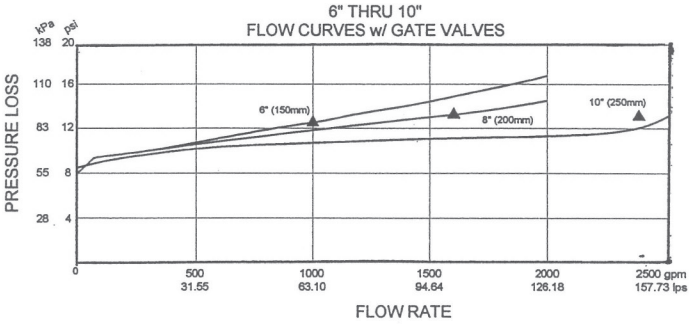

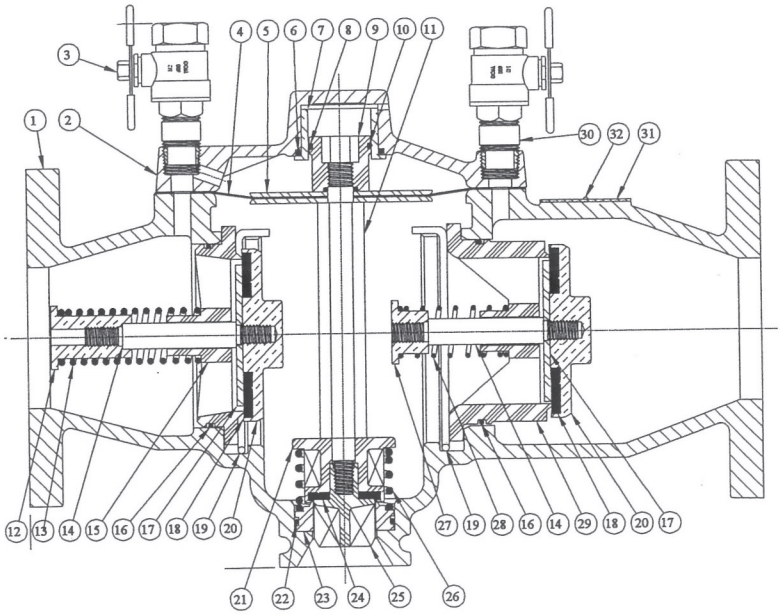

ITEM	QTY.	DESCRIPTION
1	1	VALVE BODY
2	1	VALVE COVER
3	4	1/2" BALL VALVE
4	1	RELIEF VALVE DIAPHRAGM
5	2	RELIEF VALVE DIAPHRAGM PLATE
6	1	RELIEF VALVE BUSHING O'RING
7	1	RELIEF VALVE COVER BUSHING
8	1	RELIEF VALVE PISTON O'RING
9	1	RELIEF VALVE PISTON
10	1	RELIEF VALVE STEM O'RING
11	1	RELIEF VALVE STEM
12	1	1st CHECK VALVE STEM RETAINER
13	1	1st CHECK VALVE SPRING
14	2	CHECK VALVE STEM
15	1	1st CHECK VALVE SEAT RING
16	2	CHECK VALVE O'RING
17	2	CHECK VALVE DISC RETAINER
18	2	CHECK VALVE DISC
19	2	CHECK VALVE SPRING CLIP
20	2	CHECK VALVE DISC HOLDER
21	1	RELIEF VALVE DISC HOLDER
22	1	RELIEF VALVE SEAT O'RING
23	1	RELIEF VALVE SEAT
24	1	RELIEF VALVE DISC
25	1	RELIEF VALVE DISC RETAINER
26	1	RELIEF VALVE SPRING
27	1	2nd CHECK VALVE STEM RETAINER
28	1	2nd CHECK VALVE SPRING
29	1	2nd CHECK VALVE SEAT RING
30	3	1/2" x 1 1/2" NIPPLE
31	1	IDENTIFICATION TAG
32	2	GRIP NAIL

FLOMATIC PVB

SIZE
3/4”, 1”, 1 1/4”, 1 1/2”, 2”

DESCRIPTION
The model PVB is a pressure vacuum breaker assembly. Production began in 1995. The division that produced backflow preventers was purchased by Watts Regulator in 2011. Production of these assemblies was discontinued in 2013. The body is of bronze construction. Both seats are replaceable. The check assembly is modular in construction. The test cocks for this model are located on the ball valves and not on the assembly body. In 2006 a modification was incorporated by lengthening the top of the body. A clip was added under the air inlet module in this newer version. In 2008 Flomatic offered the Wilkins 720A in sizes 1 1/2”-2” to complement their 3/4”-1” sizes.

BASIC REPAIR KIT
Repair kit contains discs and O-rings

SIZE	KIT NO
3/4”-1”	B95RK00 ◆
1 1/2”-2”	RK2720A

IMPORTANT FEATURES
~Bronze body

~Modular check assembly

~Test cocks are mounted on ball valve

~Factory repair information enclosed

Pressure Vacuum Breaker — Specification Submittal Sheet

Model PVB (3/4" & 1")

Danfoss Flomatic

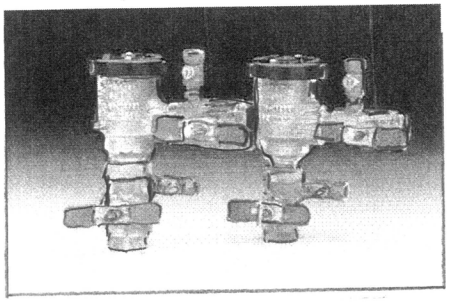

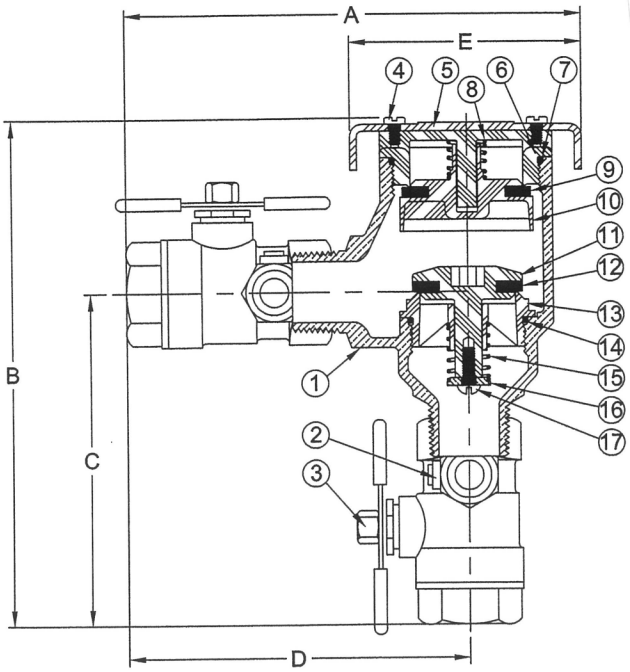

Max. working pressure: 150 PSI (1200 kPa)
Max. working temperature: 140°F (60°C)
Hydrostatic Test Pressure: 300 PSI (2400 kPa)

MATERIALS:

Valve Body: Bronze (ASTM B584)
Access Cover: ABS
Polymers: Noryl™, NSF Listed
Elastomers: Silicone / Buna-n
Springs: Stainless Steel

FLOW CHARACTERISTICS

FLOW CURVES w/ BALL VALVES

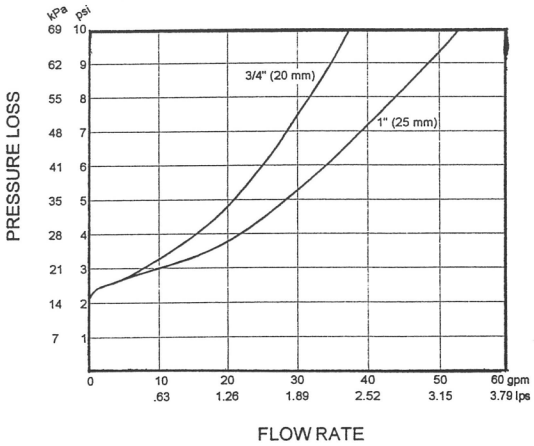

Size		Part #	A		B		C		D		E		Width		Wgt less BV	
inch	mm		inch	mm	inch	mm	inch	mm	inch	mm	inch	mm	inch	mm	lbs	kg
3/4	20	B9500	6	152	6-9/16	167	4-5/16	110	4-1/2	114	3	76	3-7/8	98	3.25	1.5
3/4	20	B9500U	6-7/8	175	7-7/16	189	5-3/16	132	5-3/8	137	3	76	3-7/8	98	4	2
1	25	B9501	6-1/2	165	7-1/8	181	5-1/16	129	5	127	3	76	4	102	4.25	2
1	25	B9501U	7-1/2	191	8-1/8	206	6-1/16	154	6	153	3	76	4	102	5.25	2.5

Item #	Qty	Description	Material
1	1	Body	Bronze
2	1	Testcock	Bronze
3	1	Ball Valve w/ Test Boss	Bronze
4	2	Screws	Stainless Steel
5	1	Canopy	ABS
6	1	Bonnet	Noryl GFN2-780S
7	1	Bonnet O'Ring	Buna-n
8	1	Vent Spring	Stainless Steel
9	1	Vent Disc	Silicone Rubber

Item #	Qty	Description	Material
10	1	Vent Disc Holder	Polyethylene
11	1	CV Disc Holder	GFC BASF#GC25A
12	1	CV Disc	Silicone Rubber
13	1	CV Seat Ring	Noryl GFN2-780S
14	1	CV Seat O'Ring	Buna-n
15	1	CV Spring	Stainless Steel
16	1	CV Spring Retainer	Bronze
17	1	Screws	Stainless Steel

CV = Check Valve

Pressure Vacuum Breaker — Specification Submittal Sheet

Model PVB (1¼" thru 2")

Danfoss Flomatic

FLOW CHARACTERISTICS

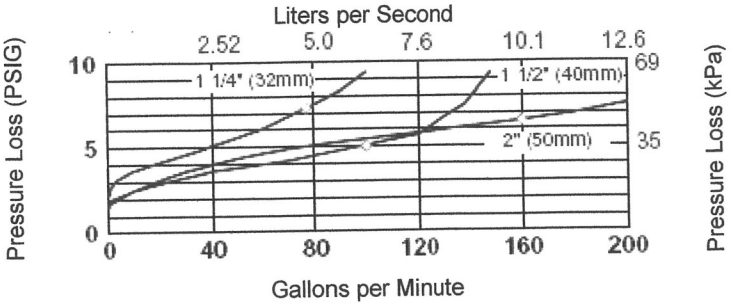

◊ RATED FLOW
(Established by Approval Agencies)

FEATURES:

Sizes: □1-¼" □1-½" □2"

Max. working pressure:	150 PSI (1200 kPa)
Max. working temperature:	110°F (43°C)
Hydrostatic Test Pressure:	300 PSI (2400 kPa)

MATERIALS:

Valve Body:	Bronze (ASTM B584)
Fastners:	Stainless Steel (300 series)
Polymers:	Polypropylene (FDA approved)
	Delrin (FDA approved)
Elastomers:	Silicone (FDA approved)
	Buna-n (FDA approved)
Springs:	Stainless Steel (300 series)

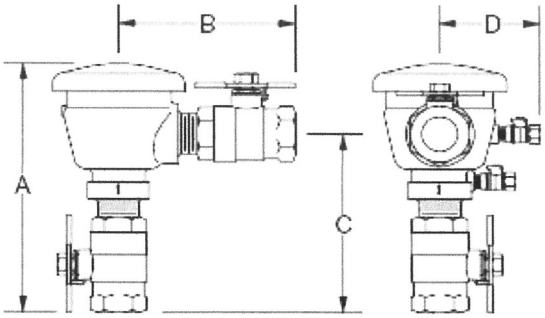

Size		Part #	A		B		C		D		Wgt w/ BV		Wgt no BV	
Inch	mm		Inch	mm	Inch	mm	Inch	mm	Inch	mm	lbs	kg	lbs	kg
1-1/4	32	B9502	10-13/16	275	7-1/4	184	7-1/4	184	4-1/2	114	20	9	14	6.4
1-1/2	40	B9503	10-3/8	264	6-7/8	175	6-7/8	175	4-1/2	114	20	9	14	6.4
2	50	B9504	11	279	7-1/2	191	7-5/8	194	4-1/2	114	26	10.4	14	6.4

Danfoss Flomatic Corp, 15 Pruyn's Island, Glens Falls, New York 12801
Phone: 518-761-9797 Fax: 518-761-9798 www.flomatic.com

FLOMATIC® VALVES

December 15,2008Rev.1
Specification Sheet PVB_2

FLOMATIC FACTORY REPAIR INFORMATION

The following pages are excerpts from literature the manufacturers print to help repair their assemblies. This information is provided to assist in repairing their assemblies but should not be considered all the information needed to repair all situations.

MODELS FOR WHICH FACTORY REPAIR INFORMATION IS PROVIDED

PAGES 8-11 THROUGH 8-29 HAVE INTENTIONALLY BEEN OMITTED

BAVCO
BACKFLOW APPARATUS & VALVE CO.

FLOMATIC® VALVES

Models DCV / DCVE / RPZ / RPZE / RPZII / RPZEII
General Service Procedures Size ½- 2"

Flomatic backflow preventers can be serviced in the field with common household tools. All assemblies have a consistent design with all parts being located in the same locations and valves serviced in the same way.

1. First closed inlet and outlet shut-off valves and bleed any pressure by opening the #4 testcock, then the #3 and #2.
2. Next use a wrench or socket to take the bolts out of top cover. After taking the cover off carefully inspect diaphragms, seals and seating surfaces for debris or damage. (RPZ Fig. 1 DCV Fig.1a)
3. After taking the cover off either check valve can be removed by simply using pliers to grasp the spring clip (RPZ figure 2, DCV figure 2a).
4. Refer to parts list and figures for detailed parts. Do not use any petroleum based oils, grease, solvent or pipe dope on any of the parts unless instructed to do so. Use only lubricants that comply with FDA PORTABLE WATER requirements for use in drinkable water systems or lubricants supplied by the manufacturer.
5. Next use a medium straight blade screw driver to carefully pry the check valve out.
6. After check valve is out of the body, check for any build up of calcium or other mineral deposits. If this condition exits then carefully remove any build-up with a straight blade screw driver. Also check the O-ring on the check valve for any cuts if it is cut or has any deposits remove and replace or clean.
7. When check valve is out of the body grasp check valve disc holder and use a wrench or socket to unscrew the check valve stem from the disc holder. (Figure 3).
8. When check valve is disassembled inspect the check valve seat for any cuts along the seat ring diameter. If seat is cut it is a sign of high back pressure from thermal water expansion, water hammer or other causes of excessive water hammer. If seat is cut or damaged it should be replaced, or turn used disc over if new seat disc is not available.

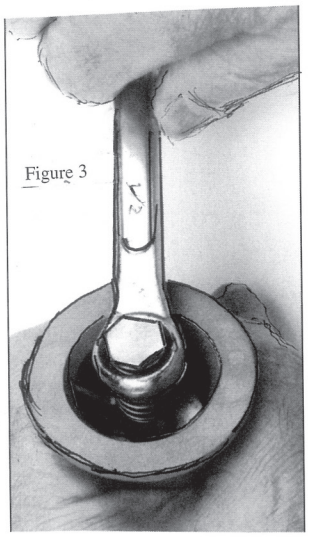
Figure 3

Figure 1

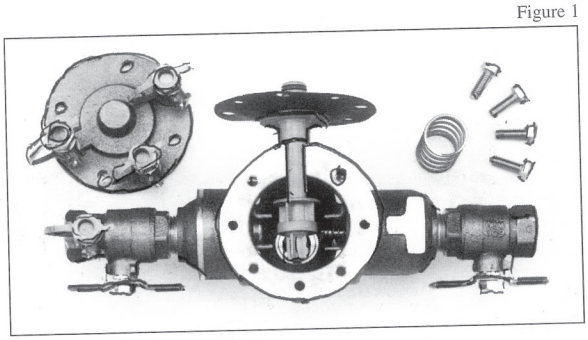

Figure 1a

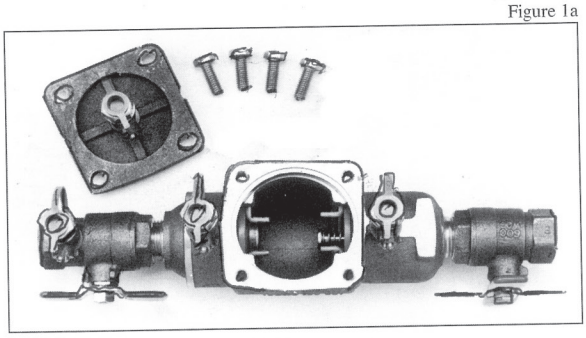

Figure 2a

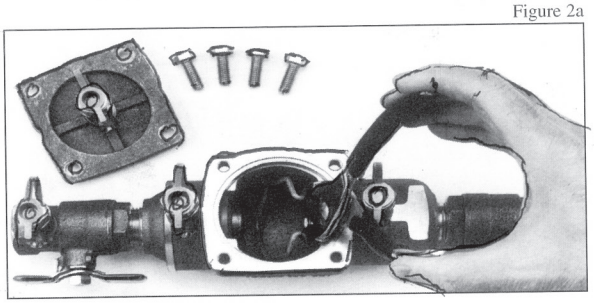

Figure 2

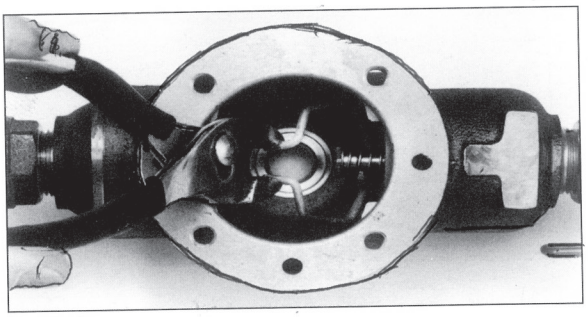

SERVICE PROCEDURES FOR RPZ/DCV CHECK VALVE

Necessary components

• Adjustable Wrench • Pliers • Flat head screw driver • Socket wrench set • Loctite 242 (blue)

Visually inspect the rubber discs, springs and bolts for defects

If check valve disc is damaged then call a service center or factory for a rubber kit. If the check valve seat ring or spring is damaged call for a complete replacement check valve.

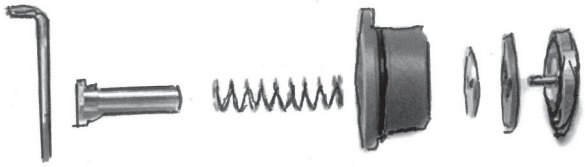

SUB-ASSEMBLIES: 1ST AND 2ND CHECK VALVES

1. Place check valve disc into check valve disc holder then place check valve disc retainer washer (with shiny side down and dull side up) over the check valve disc.
2. Place the 1st or 2nd check valve seat ring on top of the disc retainer and place O-ring around the slot in the seat ring. Then align these items with threaded hole in check valve disc holder.
3. Apply Loctite on the threads of the check valve disc holder.
4. Slide the spring down the shaft of the 1st or 2nd check valve seat ring. (Use heavy spring for 1st check in RPZ units)
5. Thread the check valve stem through the assembly and tighten the stem into threads on the check valve disc holder.

NOTE: DCV and RPZ check valve assemblies are identical with the exception of the 1st check valve spring.

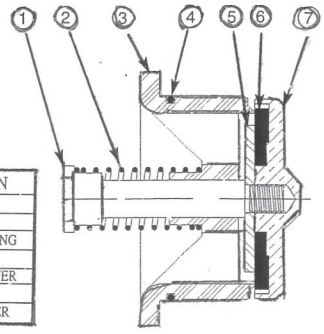

ITEM	DESCRIPTION
1	C.V. STEM
2	C.V. SPRING
3	2nd C.V. SEAT RING
4	C.V. O-RING
5	C.V. DISC REAINER
6	C.V DISC
7	C.V. DISCHOLDER

SERVICE PROCEDURES FOR RPZ RELIEF VALVE

Necessary components • Adjustable Wrench • Pliers • Flat head screw driver • Socket wrench set-Loctite 242 (blue) Relief Valve Assembly

1. After removing the cover of the backflow preventer then remove the relief valve assembly from body. Inspect the assembly for debris or damage.
2. Grasp the bottom disc retainer and use a Allen wrench to take the assembly apart. Turn the Allen wrench counter clockwise until the assembly is apart. (figure 1)
3. If the relief valve disc/rubber has dirt or debris on it then rinse in clean water. If the disc/rubber is cut or damage beyond repair contact service center or factory and request a rubber kit for the relief valve assembly.
4. Put relief valve diaphragm plate down the stem then place relief valve diaphragm on top of plate and screw piston onto stem.
5. Put the O-ring onto the relief valve piston.
6. Then place relief valve disc holder on the bottom of the shaft and put the relief valve disc/rubber into disc holder, then screw relief valve retainer on to threads.

Figure 1

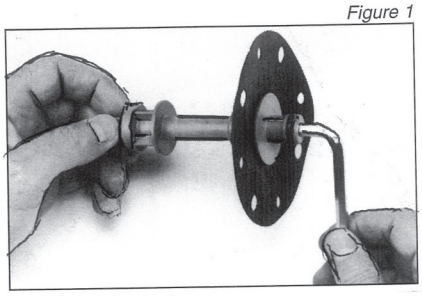

Figure 2

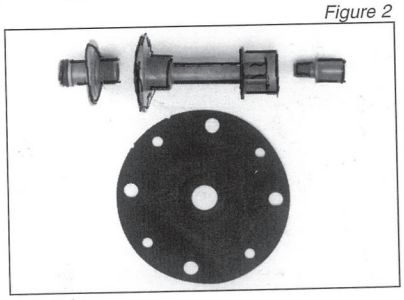

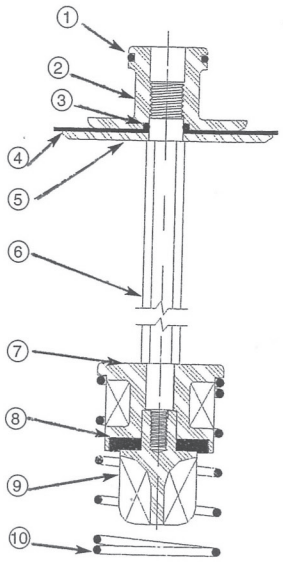

ITEM	DESCRIPTION
1	PISTON O'RING
2	R.V. PISTON
3	R.V. STEM O-RING
4	R.V. DIAPHRAGM
5	R.V. DIAPHRAGM PLATE
6	R.V. STEM
7	R.V. DISCHOLDER
8	R.V. DISC
9	R.V. DISC RETAINER
10	R.V. SPRING

RELIEF VALVE ASS'Y

RPZ/DCV BACKFLOW REASSEMBLY

Visually inspect the valve body, springs and bolts for defects. Carefully remove any debris or foreign material with a flat head screwdriver.

Directions for assembly

1. Put lubricant on the 1st and 2nd check valve O-rings.
2. Put the 1st check valve into the body and secure with clamp.
3. Do the same for the 2nd check valve.
4. Lubricate relief valve O-ring with Silicone Lubricant.
5. For the RPZ UNITS Lubricate the relief valve seat into body and put spring over the seat then a-line relief valve assembly with hole in seat and the holes in the diaphragm.
6. Place the RPZ/DCV cover over the body and secure with bolts (on the RPZ units the 2 small slits on the diaphragm should face the inlet side).

GENERAL SERVICE INSTRUCTIONS PRESSURE VACUUM BREAKER 3/4"-1" (20mm - 25mm)

1. Removal of bonnet/poppet

a. Close outlet ball valve then close inlet ball valve. Bleed residual pressure by opening No. 2 testcock.

b. Remove canopy screws and canopy.

c. Unscrew bonnet assembly from valve body by hand (If necessary, use appropriate size wrench on the outside diameter of bonnet).

d. Remove poppet/seal for any cracks or debris if it is dirty then clean with warm water.

2. Removal of check valve

a. After removing the bonnet/poppet inspect the check valve.

b. Use a 12 point 1-3/8" socket to unscrew check valve out from the body (see figure 2).

c. Clean and inspect all components thoroughly prior to reassemble.

d. Vent and check valve discs are reversible.

e. Use flat head screw driver to disassemble the check valve (see figure 3)

Figure 1

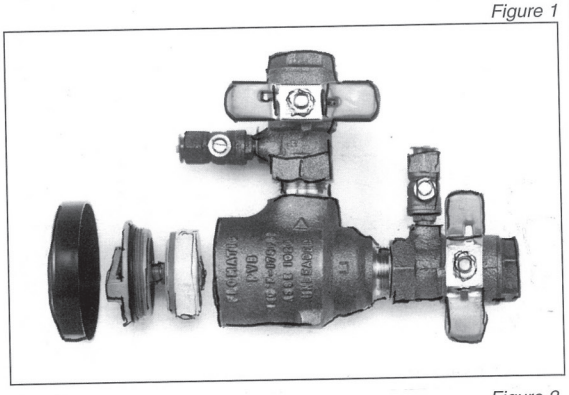

Figure 2

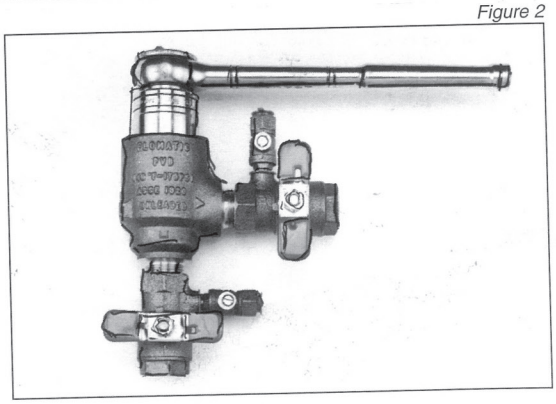

Figure 3

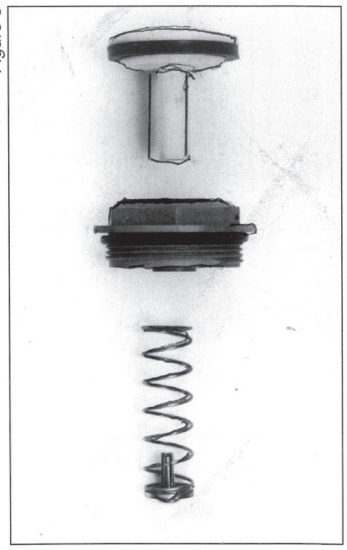

FLOMATIC VALVES Model DCV Sizes 2 1/2 – 10"

MAINTENANCE INSTRUCTIONS

1.GENERAL
A. Clean all parts thoroughly with water after disassembly.
B. Carefully inspect silicone discs, and o-rings for damage.
C. Test unit after reassembly for proper operation.

2. SERVICING CHECK VALVES
A. Close inlet and outlet shut-off valves.
B. Open No. 2, 3, and 4 test cocks to release pressure from valve.
C. Remove the cover bolts valve cover.
D. Remove check valve spring pin and check valve assembly.
E. Inspect check valve seat and o-ring for debris and damage.
F. To remove silicone disc, unscrew check valve stem from disc holder.
G. Remove disc retainer and disc from the discholder and inspect for cuts or embedded debris.
H. The silicone disc may be inverted if the reverse side is undamaged.
I. Inspect the valve cavity and seat area for damage and debris.
J. Reverse the above procedures to reinstall the check valve assemblies. ***NOTE: Check valves can only be installed in one configuration, they are not reversible.***

Model RPZ 2 ½ - 10"

Maintenance Instructions

1. GENERAL
A. Clean all parts thoroughly with water after disassembly.
B. Carefully inspect silicone discs, diaphragms and o-rings for damage.
C. Test unit after reassembly for proper operation.

2. SERVICING CHECK VALVES
A. Close inlet and outlet shut-off valves.
B. Open # 2, 3 and 4 test cocks to release pressure from valve.
C. Remove the bolts from the relief valve cover.
CAUTION: COVER IS SPRING LOADED.
To avoid injury, hold cover down firmly with one hand while loosening bolts.
D. Remove relief valve cover and assembly.
E. Remove the check valve spring clips.
F. Remove the 1st check valve assembly.
G. Remove the 2nd check valve assembly.
H. Inspect check valve seat and o-ring for debris and damage.
⚠ I. To remove silicone disc, unscrew check valve stem from disc holder.
J. Remove disc retainer and disc from the disc holder and inspect for cuts or embedded debris.
K. The silicone disc may be inverted if the reverse side is undamaged.
L. Inspect the valve cavity and seat area for damage and debris.
M. Reverse the above procedures to reinstall the check valve assemblies.
NOTE: Check valves can only be installed in one configuration, they are not reversible.

3. SERVICING RELIEF VALVE
A. Remove relief valve cover bolts.
CAUTION: COVER IS SPRING LOADED.
Hold cover firmly with one hand while removing bolts.
B. Remove cover, piston assembly and spring.
C. Inspect o-ring and diaphragm for cuts or embedded debris.
D. Remove diaphragm by unscrewing the relief valve piston from the stem.
E. Inspect relief valve disc for damage and debris.
F. To remove disc, unscrew disc retainer from relief valve stem.

NOTE: Relief valve disc is also reversible.
G. Remove stainless steel relief valve seat and inspect for damage and debris. Also inspect seat o-ring for damage.
H. Reverse the above procedures to reinstall the relief valve.

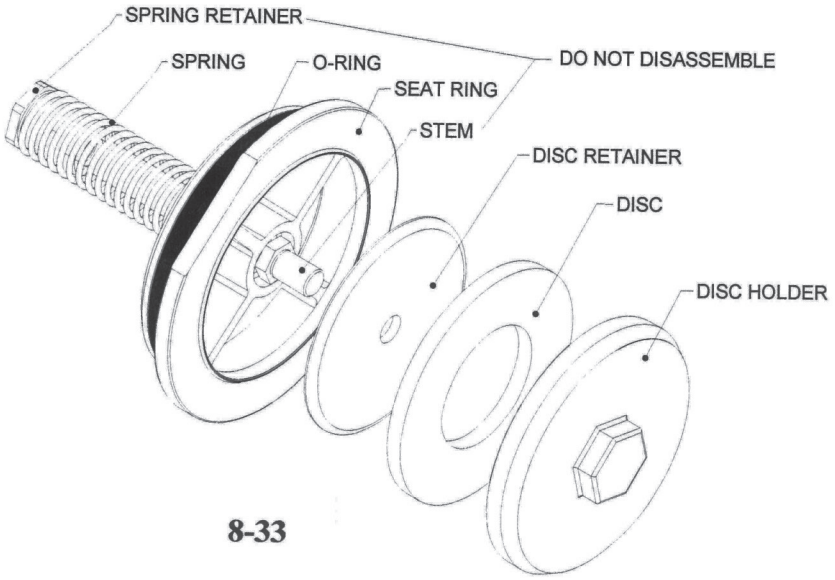

⚠ **DO NOT REMOVE** THE SPRING RETAINER FROM THE STEM ASSEMBLY. Remove the disc holder from the stem assembly.