WATTS 774 DCDA
WATTS 774X DCDA

SIZE
2 1/2", 3", 4", 6", 8", 10", 12"

DESCRIPTION
This is a double check detector assembly. In 1997 the Watts Company purchased the Ames Company. In 1998 Watts began marketing the Ames 3000SS as the Watts 774 DCDA and the Ames 3000SE as the Watts 774X DCDA. The body is made of stainless steel. The model utilizes a modular check design so the springs will be contained when the cover is removed. The main valve is similar to the Watts model 774. In the 2 1/2"-6" size the check assemblies are not field repairable and the whole check module must be replaced for an average repair. The bypass assembly will be either the Watts 007 M2 or the Watts 007 M3. Be sure to notice if you have the model 774 DCDA or the 774X DCDA as the parts will be different. The 774XDCDA models were discontinued in 2001. The 8"-10" check does have a rubber disc that is field replaceable.

BASIC REPAIR KIT
The mainline repair kit contains all check modules and O-rings.

SIZE	KIT NO
2 1/4"-4" 774 DCDA	774-T400
6" 774 DCDA	774-T600
6" 774X DCDA	774-T400
8"-12" 774 DCDA	774-T800
8" 774X DCDA	774-T600

The bypass repair kit contains all disc holders and O-ring.

SIZE	KIT NO
3/4" 007M2	007M2-RT075
3/4" 007M1	007M1-RT075

IMPORTANT FEATURES
~Mainline assembly: See Watts 774

~Bypass assembly: See Watts 007M2 3/4" or 3/4" 007M3

~Factory repair information enclosed

BAVCO
BACKFLOW APPARATUS & VALVE CO.

Series 774DCDA 774XDCDA

Double Check Detector Assembly 2 ½ - 12"

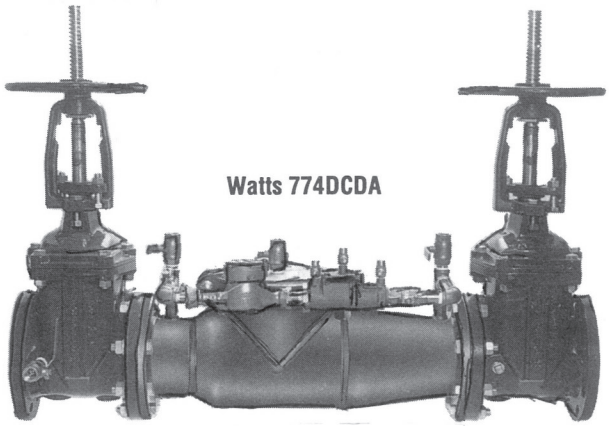

MATERIALS

All internal metal parts: 300 Series stainless steel
Main valve body: 300 Series stainless steel
Check assembly: Noryl
Flange dimension in accordance with AWWA Class D

PRESSURE - TEMPERATURE

Suitable for supply pressures up to 175 psi (12.1 bars) and water temperature to 110°F (43°C) continuous

FEATURES

- Patented torsion spring check valve provides low head loss
- Short lay length is ideally suited for retrofit installations
- Stainless Steel body is half the weight of competitive designs reducing installation and shipping cost
- Stainless steel construction provides long term corrosion protection and maximum strength
- Single top access cover with two-bolt grooved style coupling for ease of maintenance
- Thermoplastic and stainless steel check valves for trouble-free operation
- No special tools required for servicing
- Compact construction allows for smaller vaults and enclosures
- Furnished with ⅝" x ¾" bronze meter (gpm or cfm)
- Detects underground leaks and unauthorized water use

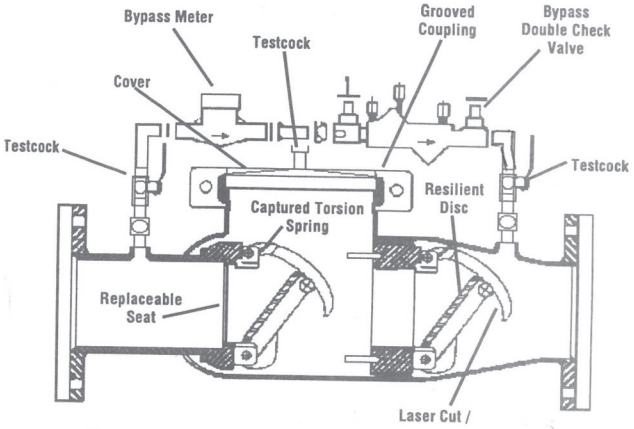

DIMENSIONS - WEIGHT (approximate)

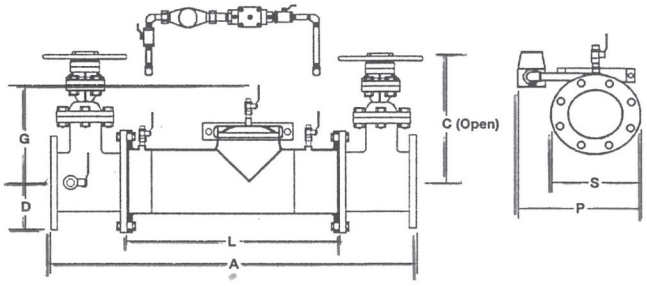

774 DCDA Size (DN) in.	mm	A in.	mm	C (open) in.	mm	D in.	mm	G in.	mm	L in.	mm	P in.	mm	Net Weight w/Gates lb.	kg.	Net Weight w/o Gates lb.	kg.
2½	65	38	965	16⅜	416	3½	89	10	254	22	559	12½	318	155	70	68	31
3	80	38	965	22	559	3¾	95	10	254	22	559	13	330	230	104	70	32

774 DCDA Size in. / mm	A in. / mm	C (open) in. / mm	D in. / mm	G in. / mm	L in. / mm	P in. / mm	Net Weight w/Gates lb. / kg.	Net Weight w/o Gates lb. / kg.
4 / 100	40 / 1016	23½ / 597	4½ / 114	10 / 250	22 / 559	14½ / 368	240 / 109	73 / 33
6 / 150	48½ / 1232	30 / 762	5½ / 140	15 / 381	27½ / 699	15½ / 394	390 / 177	120 / 54
8 / 200	52½ / 1334	37¾ / 959	6¾ / 171	15 / 381	29½ / 749	18¼ / 464	572 / 259	180 / 82
10 / 250	55½ / 1410	48 / 1219	8 / 200	15 / 381	29½ / 749	19½ / 495	774 / 351	190 / 86
12/ 300	57½ / 1461	54 / 1372	9½ / 241	15 / 381	29½ / 749	21 / 533	1044 / 474	220 / 100
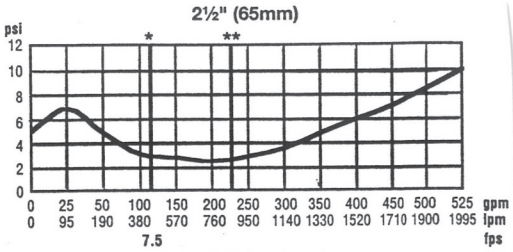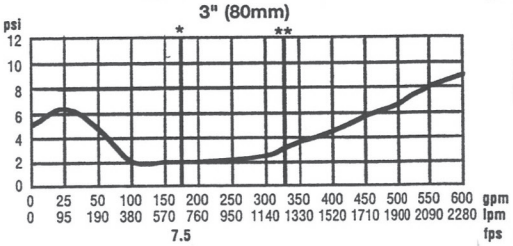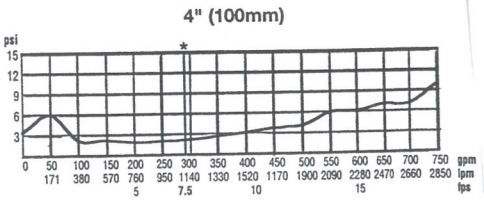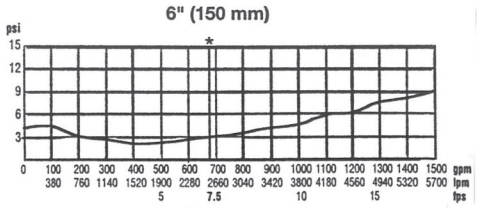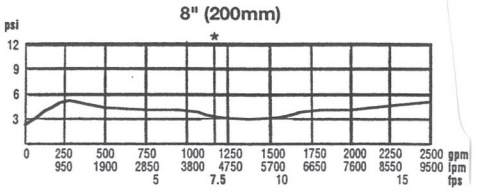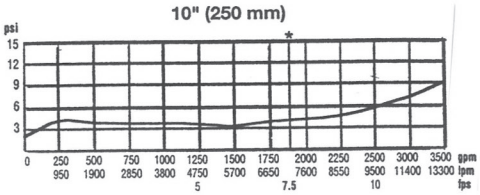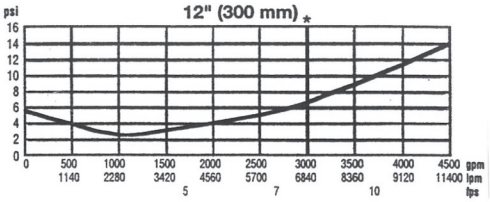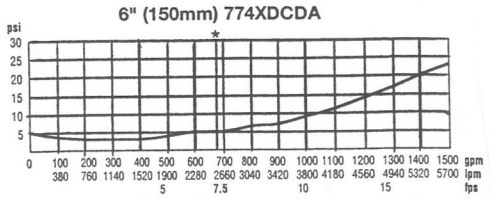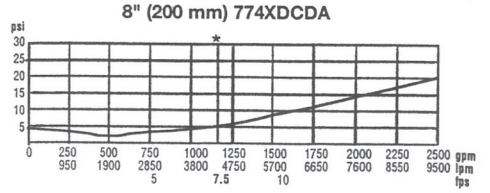
774X DCDA Size in. / mm	A in. / mm	C (open) in. / mm	D in. / mm	G in. / mm	L in. / mm	P in. / mm	S in. / mm	Net Weight w/Gates 774X lb. / kg	774XDCDA lb. / kg.
6 / 150	41½ / 1054	30⅛ / 765	5½ / 140	11⅛ / 283	20 / 508	16½ / 419	11 / 279	328 / 149	341 / 155
8 / 200	52½ / 1334	37¾ / 959	6¾ / 171	17½ / 445	29½ / 749	17½ / 445	13½ / 343	540 / 245	555 / 252