WILKINS
350ASTDA

SIZE
2 1/2", 3", 4", 6", 8", 10"

DESCRIPTION
This is a double check detector assembly. Production began in 2011. The mainline assembly is similar to the 350AST assembly. The bypass assembly utilizes an assembly similar to the 950XLD.

REPAIR KIT
Mainline repair kit contains discs and O'rings

SIZE	KIT NO
2 1/2"-4"	RK4-350
6"	RK6-350
8-10"	RK8-350

Bypass repair kit contains discs and O'rings

SIZE	KIT NO
3/4" 950XLD	RK34-950XLR

IMPORTANT FEATURES
~Mainline assembly similar to 350AST
~Bypass assembly similar to 950XLD

WILKINS
a ZURN company

Model 350ASTDA
Double Check Detector Assembly

FEATURES

Sizes: ❑ 2 1/2" ❑ 3" ❑ 4" ❑ 6" ❑ 8" ❑10"

Maximum working water pressure		175 PSI
Maximum working water temperature		140°F
Hydrostatic test pressure		350 PSI
End connections	(Grooved for steel pipe)	AWWA C606
	(Flanged)	ANSI B16.1 Class 125

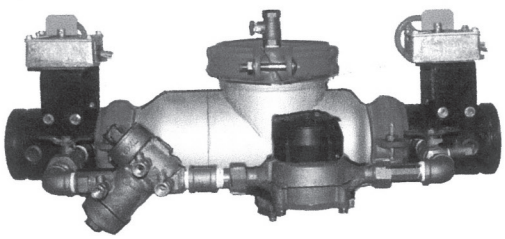

2 ½" – 10"

MATERIALS

Main valve body	304L Stainless steel
Access covers	304L Stainless steel
Internals	Stainless steel, 300 Series NORYL™, NSF Listed
Fasteners & springs	Stainless Steel, 300 Series
Elastomers	EPDM (FDA approved) Buna Nitrile (FDA approved)
Polymers	NORYL™, NSF Listed

MODEL 350ASTDA with OS&Y option

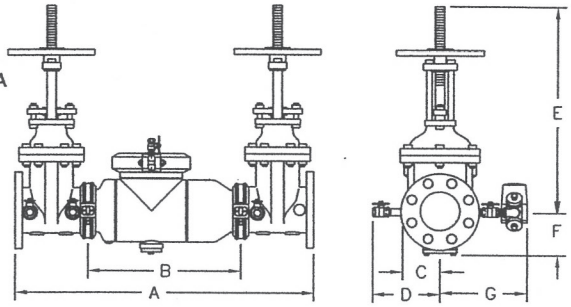

MODEL 350ASTDA with BGVIC option

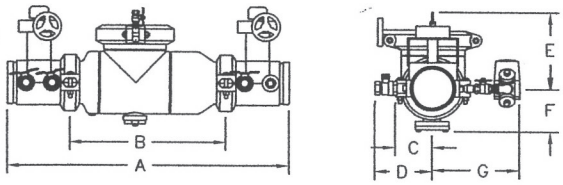

DIMENSIONS & WEIGHTS (do not include pkg.)

MODEL 350ASTDA SIZE		WEIGHT					
		WITH OS&Y GATES (GXF)		WITH OS&Y GATES (GXG)		WITH BUTTERFLY VALVES (GXG)	
in.	mm	lbs.	kg	lbs.	kg	lbs.	kg
2 1/2	65	126	57	116	53	70	32
3	80	143	65	131	60	73	33
4	100	218	99	198	90	85	39
6	150	352	160	322	147	142	65
8	200	667	303	613	278	314	142
10	250	885	401	827	375	419	190

MODEL 350ASTDA SIZE		DIMENSION (approximate)																			
		A		A WITH BUTTERFLY VALVES		B LESS GATE VALVES		C		D		E OS&Y OPEN		E OS&Y CLOSED		E WITH BUTTERFLY VALVES		F		G	
in	mm	in	mm	in	mm	in	mm	in	mm	in	mm	in	mm	in	mm	in	mm	in	mm	in	mm
2 1/2	65	31 7/8	810	28 3/4	730	16 5/8	422	4 1/2	114	7 1/4	184	17 3/4	451	15 3/8	391	8	203	5	127	12	305
3	80	32 7/8	835	29 3/8	746	16 5/8	422	4 1/2	114	7 1/4	184	20 1/4	514	17	432	8	203	5	127	12	305
4	100	34 7/8	886	30 1/4	768	16 5/8	422	4 1/2	114	8	203	22 1/2	572	18 1/4	464	9 1/8	232	5	127	12	305
6	150	43 1/2	1105	36 1/2	927	22 1/4	565	5 1/2	140	10	254	30 1/2	775	24 1/4	616	10 1/8	257	6	152	10 1/2	267
8	200	52 3/4	1340	45 3/4	1162	29 1/2	749	9 1/4	235	11	279	37	940	28 1/2	724	18 1/2	470	8 3/8	213	15 1/8	384
10	250	55 3/4	1416	49 3/4	1264	29 1/2	749	9 1/4	235	12	305	45 5/8	1159	34 3/4	883	18 1/2	470	8 3/8	213	15 1/8	384

FLOW CHARACTERISTICS

MODEL 350ASTDA 2 1/2", 3" & 4" (STANDARD & METRIC)

◇ Rated Flow (Established by approval agencies)

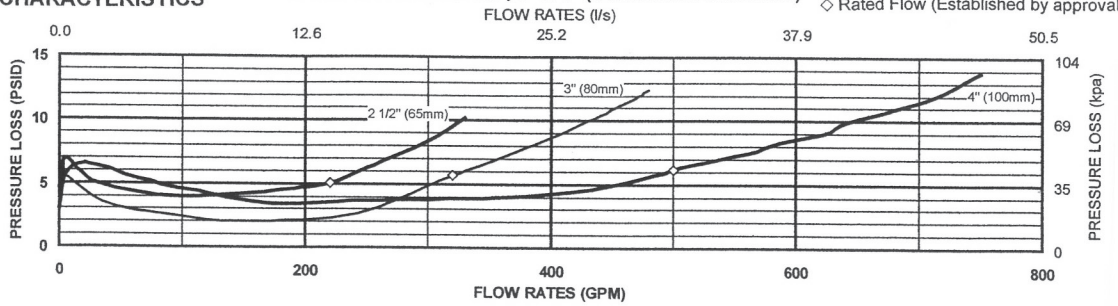
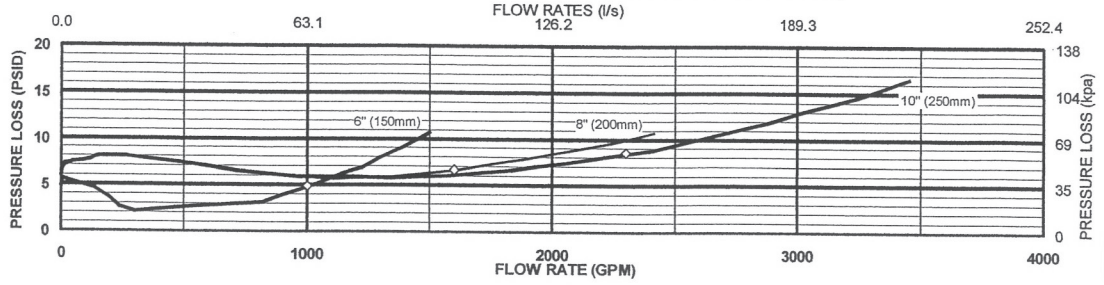
MODEL 350ASTDA 6" 8" & 10" (STANDARD AND METRIC)